DECOMATIC ROLLER BLIND D32

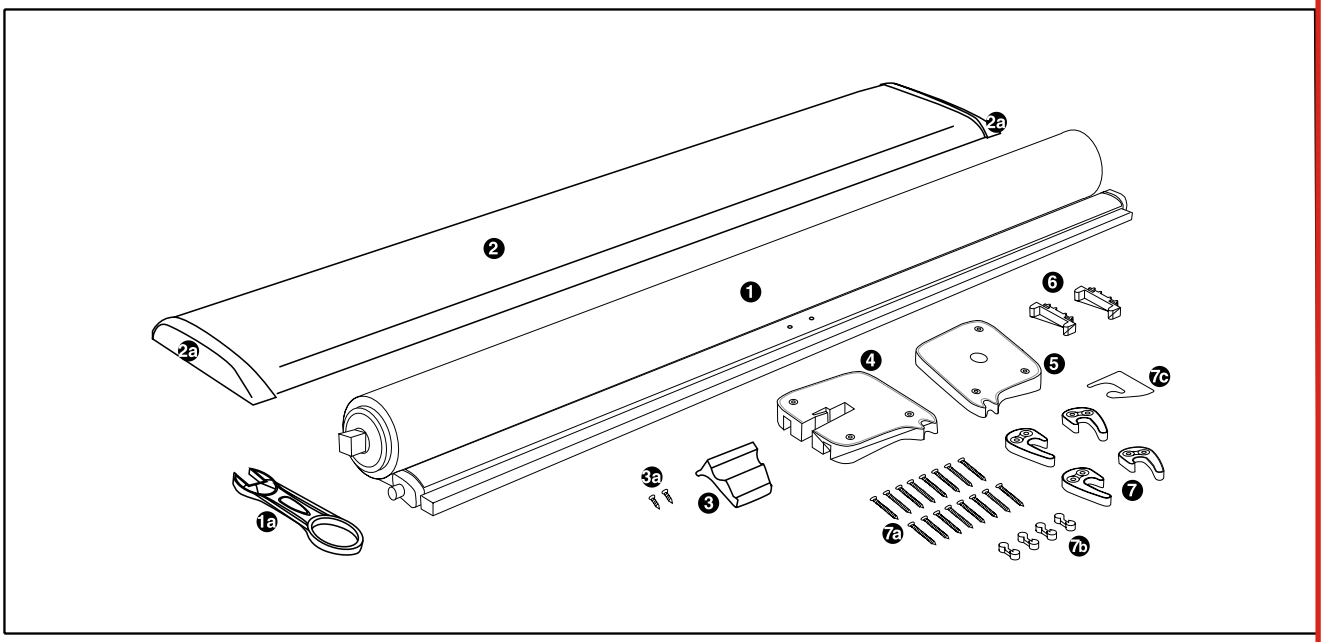

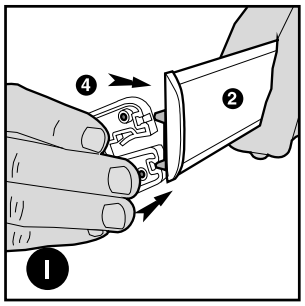

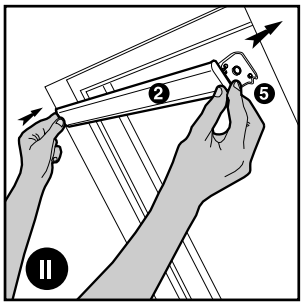

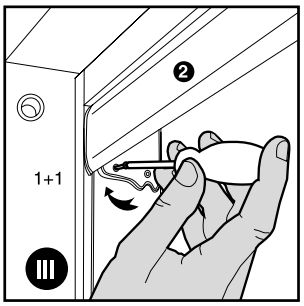

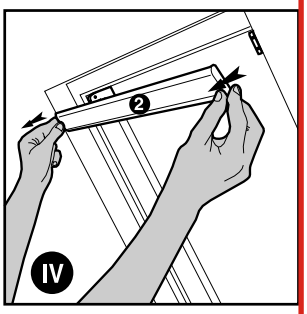

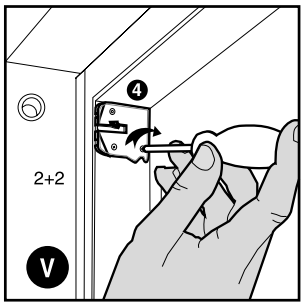

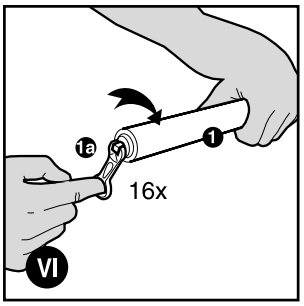

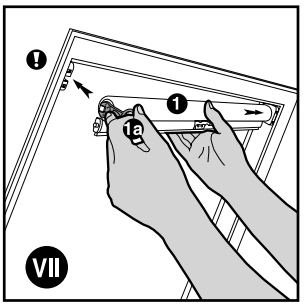

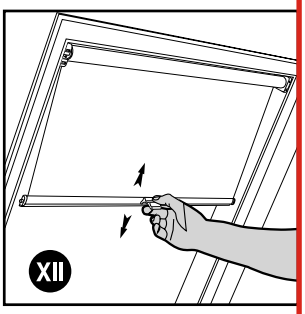

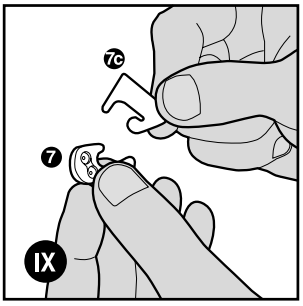

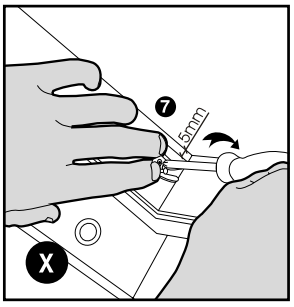

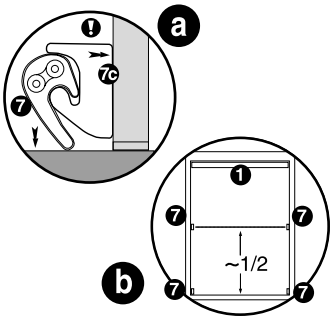

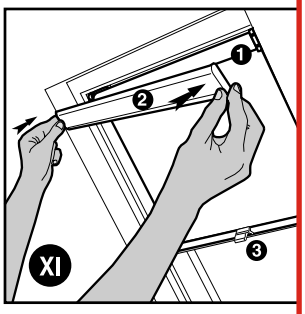

OKPOL 2010